Crystal Units
Surface Mount Type CX3225SB

3.2×2.5mm for Consumer Products/ Mobile Communications

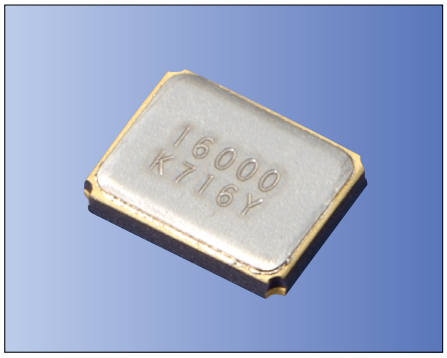

RoHS Compliant

Features

- Crystal unit for consumer products and mobile communications
- Miniature and low profile (3.2×2.5×0.55mm)
- Ceramic package
- Reflow compatible

Applications

- Digital Electronics
- Consumer Products
- Mobile Communications, Bluetooth®, Wireless LAN

* Bluetooth® Trademarks are owned by Bluetooth SIG Inc.

How to Order

CX3225SB	27000	D0	G	L	L	CC
①	②	③	④	⑤	⑥	⑦

①Series
②Frequency
③Load Capacitance

D0	8 pF

④Frequency Tolerance

G	±15×10⁻⁶

⑤Operating Temp. Range ⑥Frequency Temp. Stability

LL	−30 to +85°C	±20×10⁻⁶

⑦Individual Specification
(STD Specification is "CC")

Packaging (Tape & Reel 3000 pcs./ reel)

Specifications

Item	Symbol	Specification	Units	Remarks
Frequency Range	f_{nom}	12000 to 54000	kHz	
Overtone Order	OT	Fundamental	—	
Load Capacitance	CL	8	pF	Please contact us for other CL requirements.
Frequency Tolerance	f_{tol}	±15	$\times 10^{-6}$	25°C±3°C
Motional Series Resistance	R1	Table 1	ohm	
Drive Level	DL	Table 2	µW	
Operating Temp. Range	T_{use}	−30 to +85	°C	
Storage Temp. Range	T_{stg}	−40 to +85	°C	
Frequency Temp. Characteristics	f_{tem}	±20	$\times 10^{-6}$	Freq. deviation from the value at 25°C

Please contact us for other specifications.

Table 1 Motional Series Resistance

Frequency Range	Motional Series Resistance
12000≤f_{nom}<13000kHz	150Ω max.
13000≤f_{nom}<20000kHz	80Ω max.
20000≤f_{nom}≤54000kHz	50Ω max.

Table 2 Level of Drive

Frequency Range	Level of Drive
12000≤f_{nom}≤54000kHz	10µW (100µW max.)

Dimensions

(Unit: mm)

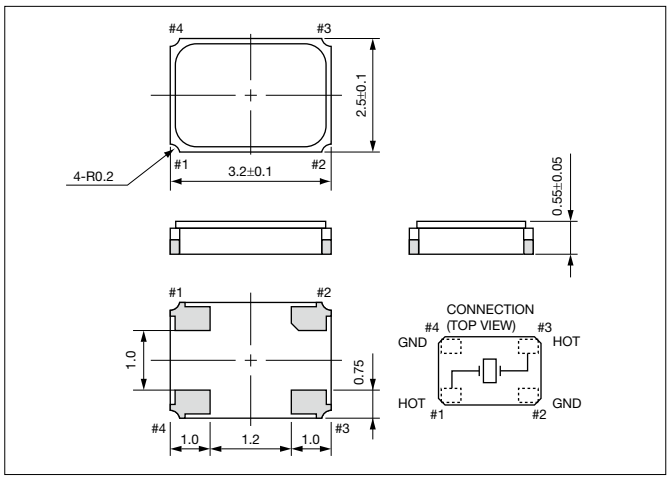

Recommended Land Pattern
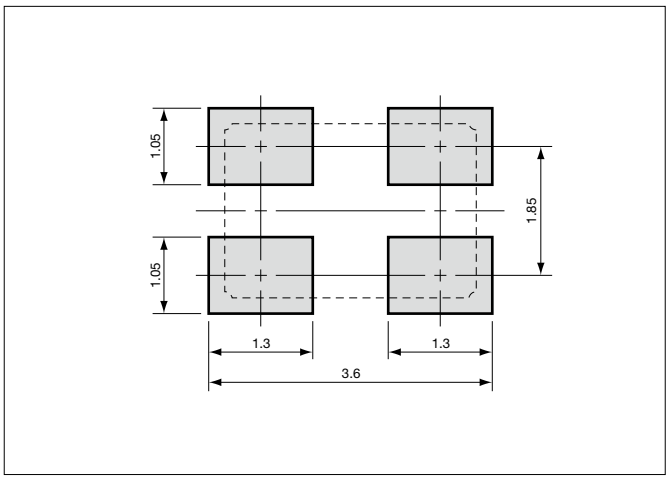
(Unit: mm)